X89-A08A
UHF RFID Antenna

SMALL IN SIZE. BIG ON PERFORMANCE.

Engineered for performance, this small but high-efficiency UHF RFID antenna ensures reliable tag reading. With low return loss, wide beamwidth, circular polarization, and optimized impedance, the antenna is designed to deliver consistent tag detection in dynamic environments—ensuring dependable performance across a range of use cases.
The antenna provides IP66-rated protection against dust, water, and harsh environmental conditions—ensuring long-term durability and stable performance in both indoor and outdoor settings. Its compact design makes it ideal for space-constrained installations. Whether for logistics, asset tracking, retail or smart shelving, etc.

CHARACTERISTICS

Frequency	902~928 MHz
Return Loss	-16 dB Max
Beam Efficiency	55% Max
Gain	2.6 dBi Max
Beamwidth (@3dB)	120° Typical
Impedance	50 Ω
Polarization	RHCP
RF Cable & Connector	RG316 & SMA(F)
Material	FR4 (Antenna) & PC (Case)
Weight	70 gr
IP Rating	IP65
Operation Temp.	-20 ~ 70°C

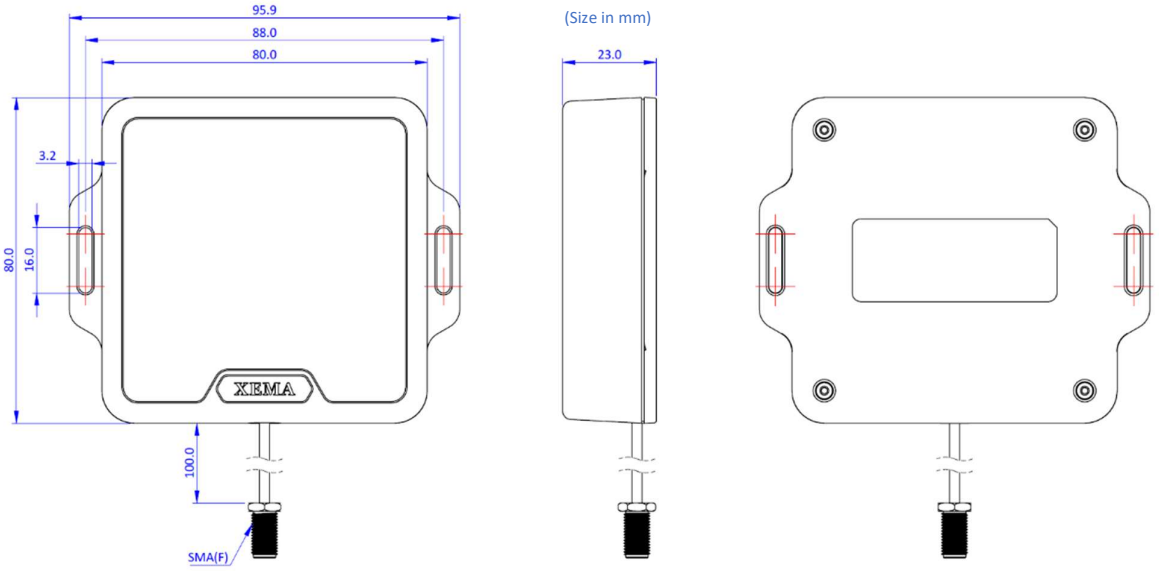

v1.0.2_260321
Copyright © 2025 Xema, Inc. All Rights Reserved

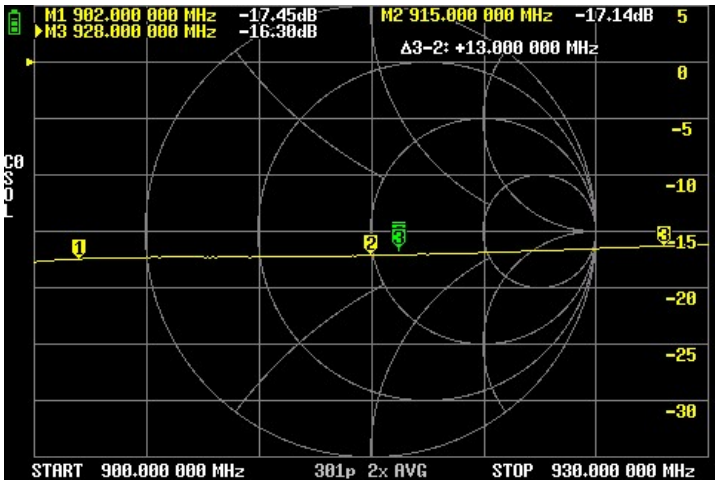

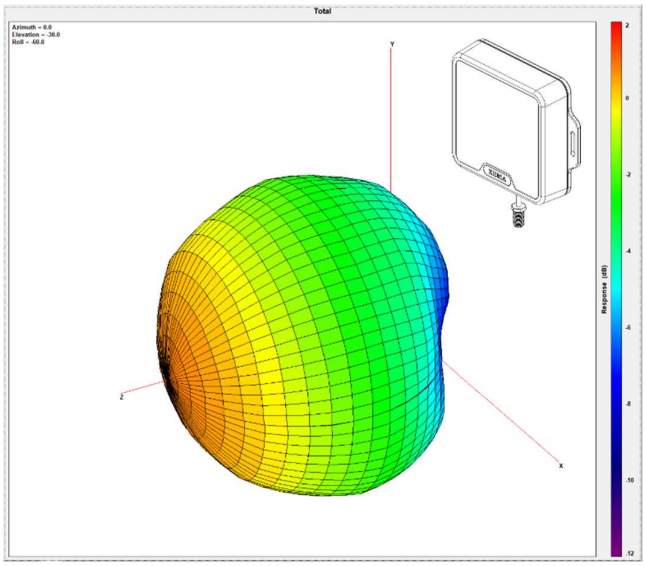

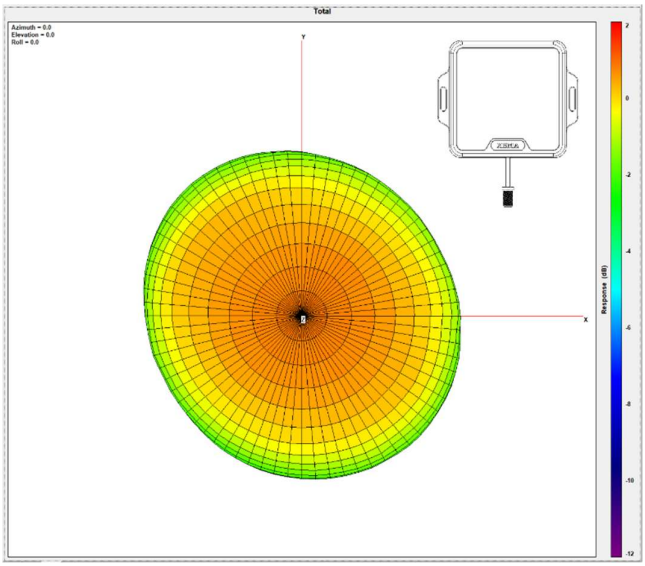

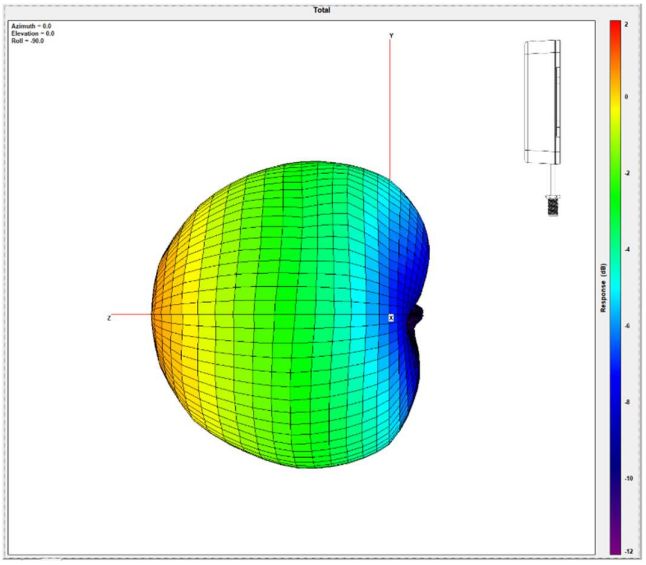

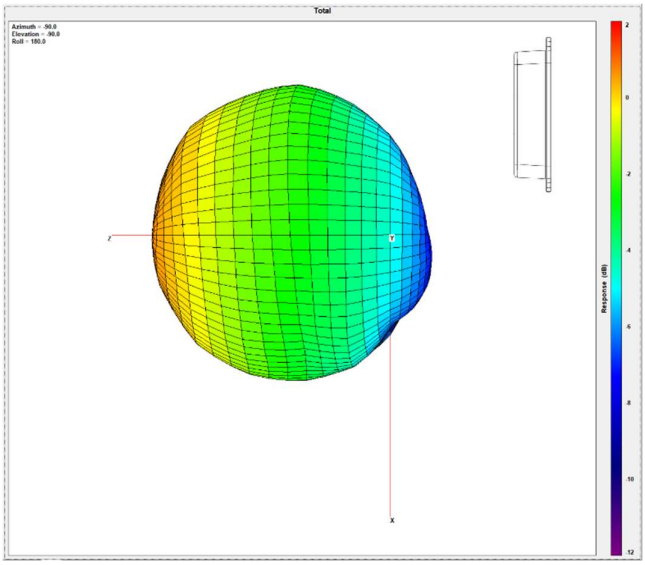

Copyright © 2025 Xema, Inc. All Rights Reserved

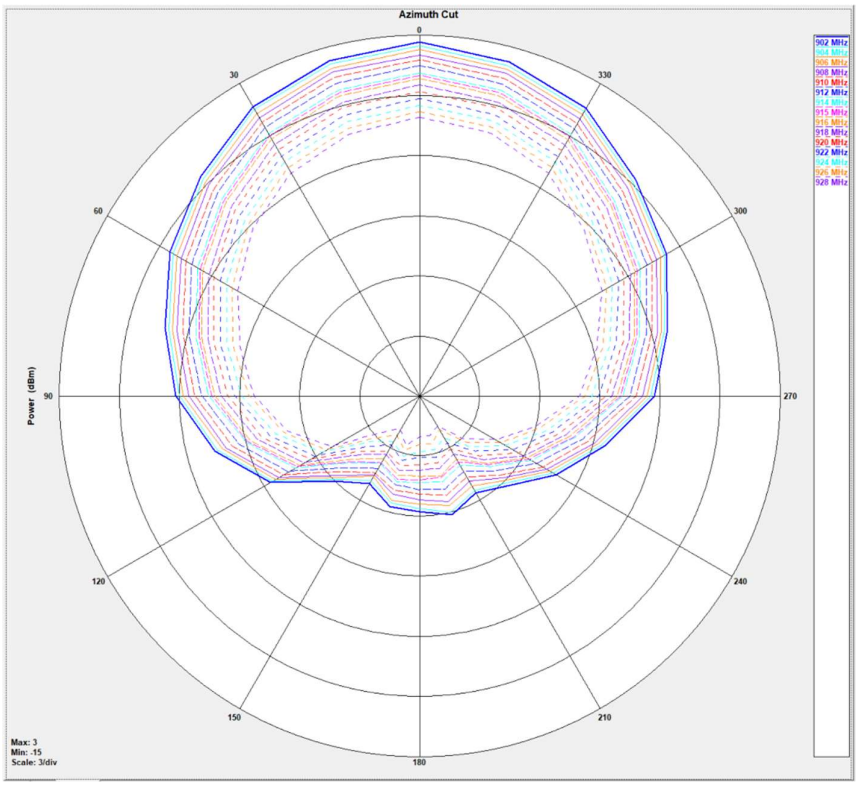

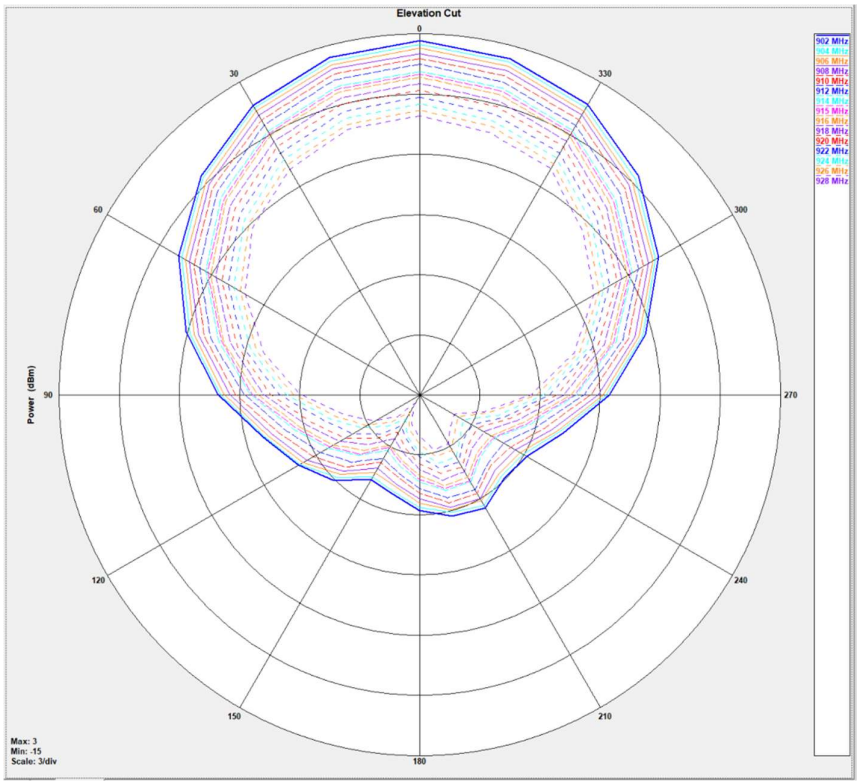

Copyright © 2025 Xema, Inc. All Rights Reserved